THE INFORMATION CONTAINED IN THIS DRAWING IS THE SOLE PROPERTY OF MBARI ANY REPRODUCTION IN PART OR WHOLE WITHOUT THE WRITTEN PERMISSION OF MBARI IS PROHIBITED.

REVISIONS

REV.	DESCRIPTION	DATE	APPROVED
E	INITIAL RELEASE	MMM DD, YYYY	Gene M

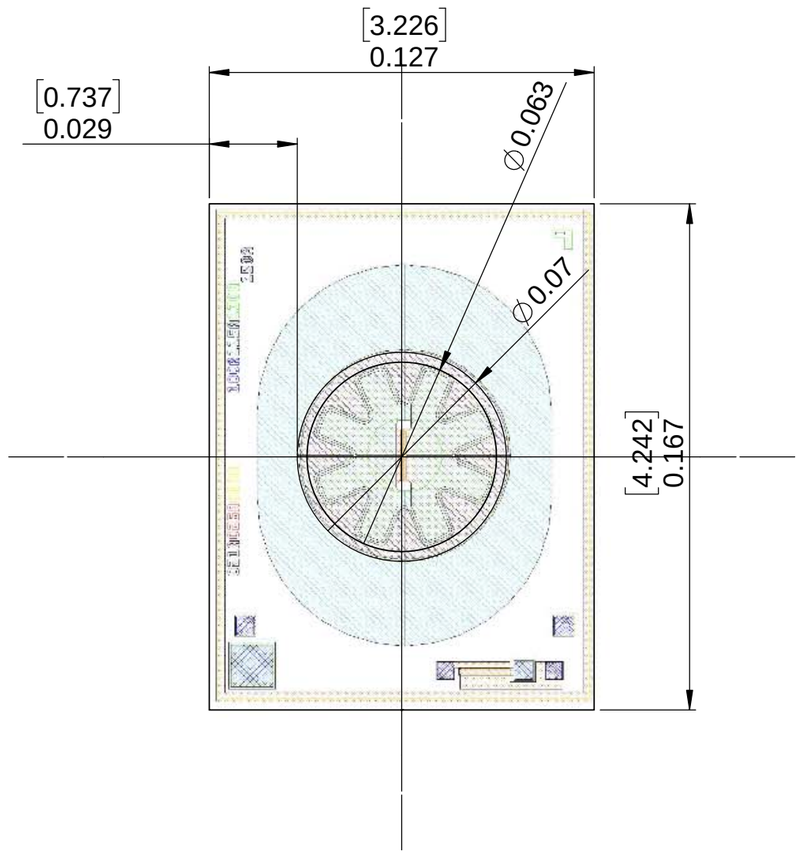

BILL OF MATERIALS

NEXT ASSY Description	NEXT ASSY Number

UNLESS OTHERWISE SPECIFIED TOLERANCES ARE:

1 PLACE DIM	2 PLACE DIM	3 PLACE DIM	ANGLES
±1/16	±.02	±.005	±1°

THIRD ANGLE PROJECTION

1. DIMENSIONS ARE IN INCHES
2. DIMENSION LIMITS HELD AFTER PLATING.
3. REMOVE BURRS AND SHARP EDGES .015 MAX.
4. MACHINED FILLET RADII .0150-.030.
5. MACHINED DIAMETERS ON A COMMON CENTERLINE CONCENTRIC WITHIN .OO5
6. PERPENDICULARITY & PARALLELISM OF MACHINED SURFACES .002 PER INCH. MAX .012 INCHES FOR SINGLE SURFACE.

DO NOT SCALE DRAWING

APPROVALS	DATE
DRAWN	Gene M.
ENGINEER	Gene M.
CHECKED	
PROJECT NO.	901206
PROJECT	Coastal Profiling Float
MATL	6061-T6

Monterey Bay Aquarium Research Institute
M B A R I
7700 Sandholdt Rd.
Moss Landing, CA 95039
831 775-1922

SIZE	DWG. NO.	REV.
B	1-20082015-901206	E

SCALE 20:1 | CAD FILE: | SHEET 1 OF 1

Status: Released to Manufacturing